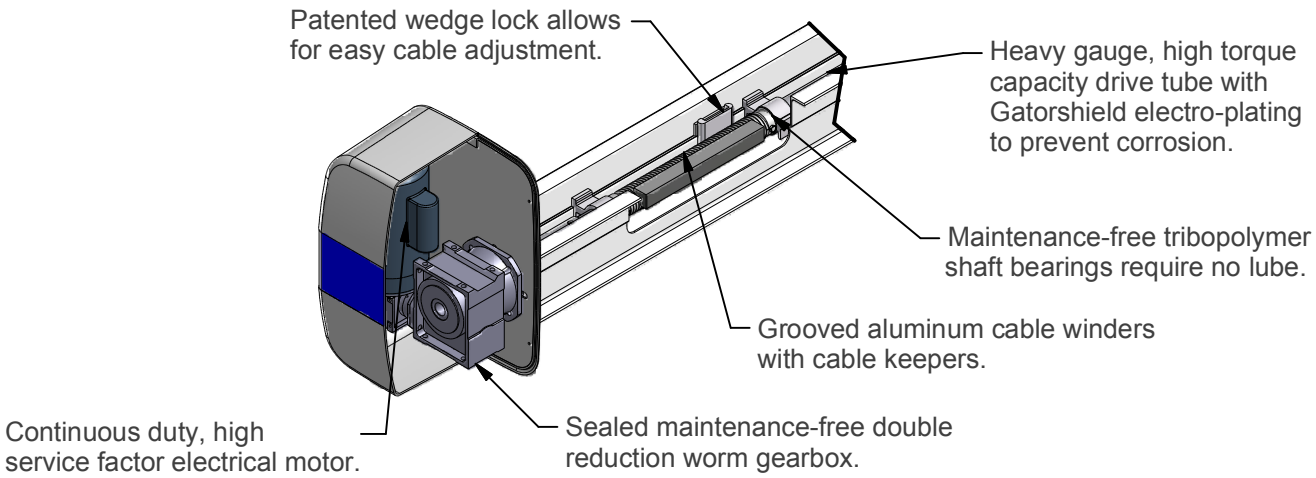
Patented wedge lock allows for easy cable adjustment.
Heavy gauge, high torque capacity drive tube with Gatorshield electro-plating to prevent corrosion.
Maintenance-free tribopolymer shaft bearings require no lube.
Grooved aluminum cable winders with cable keepers.
Continuous duty, high service factor electrical motor.
Sealed maintenance-free double reduction worm gearbox.

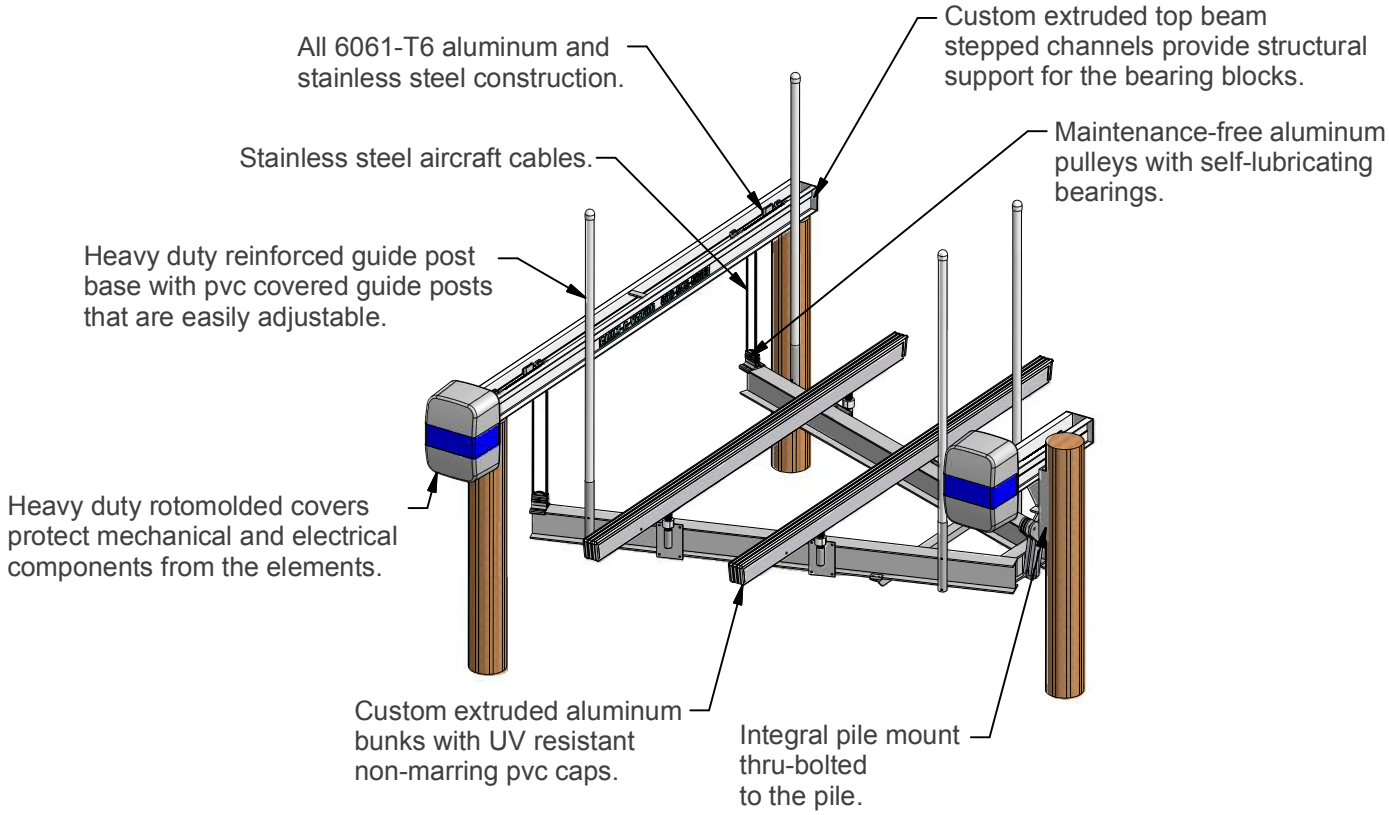
All 6061-T6 aluminum and stainless steel construction.
Custom extruded top beam stepped channels provide structural support for the bearing blocks.
Stainless steel aircraft cables.
Maintenance-free aluminum pulleys with self-lubricating bearings.
Heavy duty reinforced guide post base with pvc covered guide posts that are easily adjustable.
Heavy duty rotomolded covers protect mechanical and electrical components from the elements.
Custom extruded aluminum bunks with UV resistant non-marring pvc caps.
Integral pile mount thru-bolted to the pile.